KWC ONO
Lever mixer - Kitchen

Modell-Linie: ONO | 10.151.033.000FL
Taps | Manual taps

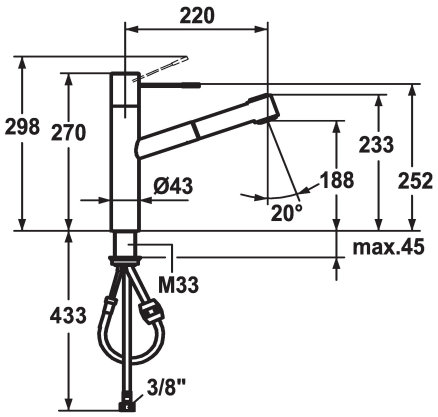

KWC-No.	Color code
121488 stainless steel, A 220, flexible connection hoses	stainless steel
121791 chromeline, A 220, flexible connection hoses	chromeline

* Lever mixer
* Surgical-grade hardened stainless steel lever
* TouchProtect - anti-scald protection thanks to the “double skin” principle
* Pull-out spray
- SprayClean - easy to clean and actively prevents limescale buildup
- up to 700 mm pull-out length
- PowerClean - needle spray mode, with automatic diverter reset
- hose surface to fit faucet surface
* Hose guide, swivelling 105°
* EasyLock - a pull-out spray that easily slides back into place
* KWC cartridge M 35 H
- with ceramic discs
- flow rate and temperature continuously variable
* Flexible connection hoses ⅜"
* Fastening by means of threaded sleeve M33 x 1.5
* Mounting hole size ø35 mm

Technical Data
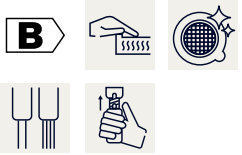
Flow rate needle spray	13 l/min (3 bar)
Flow rate normal spray	12 l/min (3 bar)
Connection	Flexible connection hoses
Spout	swivel
Handling	top lever
Kitchenspray	Pull-out spray
Color code	chromeline
Installation type	Pillar installation
Faucet_typ	Needle spray1
Dimension Height	270
Acoustic group	2
Projection A	A 220
Energy label	B
Dimension Water outlet	188
material	Brass