**KWC** BEVO
Lever mixer - Bidet

**Modell-Linie: BEVO | 13.421.041.000FL**
Armatura umywalkowa | Armatura jednouchwytowa

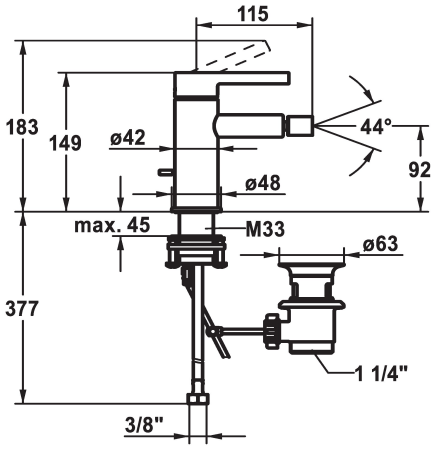


| KWC-No. | ATT-KWC-FARBCODE |
|---|---|
| **124618**<br>chromeline, A 115, flexible connection hoses, with pop-up valve | chromeline |
| **3600003608**<br>matt black, A115, flexible connection hoses, with Push Open | matt black |
| **3600003633**<br>brushed steel, A115, flexible connection hoses, with Push Open | brushed steel |

* Lever mixer
* EcoProtect - water-saving device
* Fixed spout
- ball joint aerator Neoperl® Caché®
* KWC cartridge M 35 OP
- with ceramic discs
- flow rate and temperature continuously variable
- temperature limitation
* Flexible connection hoses ⅜"
* QuickInstallation - Fastening via threaded connection with locking screws
* Mounting hole size ø35 mm
* Scope of delivery:
- KWC pop-up valve Z.538.581.000

**Dane techniczne**

| | |
|---|---|
| A_Spout_Spray | 5 l/min (3 bar) |
| ATT-KWC-ABLAUFGARNITUR | mit_Ablaufgarnitur |
| Connection | Flexible_Anschlussschläuche |
| ATT-KWC-AUSLAUF | fest |
| Handling | topbedient |
| ATT-KWC-FARBCODE | chromeline |
| Installation_type | Standmontage |
| Faucet_typ | 01 |
| Dimension Height | 149 |
| G_Acoustic group | 1 |
| Projection_A | A115 |
| EnergyLabelCH | A |
| ATT-KWC-MASS-WASSERAUSTRITT | 92 |
| Materiał | Mosiądz |

## Części zamienne

**KWC** BEVO
Lever mixer - Bidet

**Modell-Linie: BEVO | 13.421.041.000FL**
Armatura umywalkowa | Armatura jednouchwytowa

**Cartridge M 35 OP**

**538331**
Z.537.710

**Service key Neoperl © Caché ©, TJ, 18 mm, green**

**634729**
CACHETJ