KWC MANA
Lever mixer - Basin

Modell-Linie: MANA | 12.551.631.000FL
Taps | Manual taps

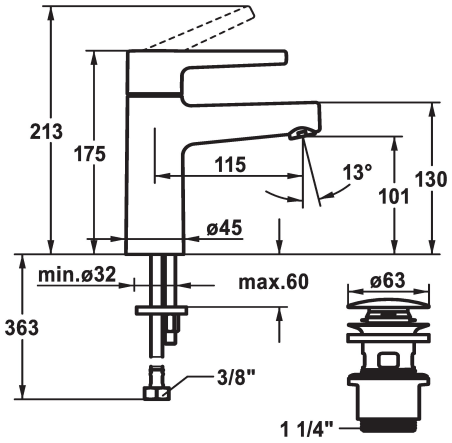

KWC-No.

125521
chromeline, A 115, flexible connection hoses, with Push Open

125522
chromeline, A 115, flexible connection hoses, without pop-up valve

* Lever mixer
* CoolFix - Cold water flow with a centered lever
* EcoProtect - water-saving device
* Fixed spout
- Neoperl® Perlator® SSR, swivelling jet regulator
* KWC cartridge M 35 OP
- with ceramic discs
- flow rate and temperature continuously variable
* Flexible connection hoses ⅜"
* Fastening by means of stud bolt M8 x 1
* Mounting hole size ø35 mm
* Scope of delivery:
- KWC pop-up valve Push Open 2 in 1 Z.538.321.000

Technical Data

Flow rate	5 l/min (3 bar)
pop-up assembly	3
Connection	Flexible connection hoses
Spout	fixed
Handling	yes
Color code	chromeline
Installation type	Pillar installation
Faucet_typ	Basin1
Dimension Height	175
Acoustic group	yes
Projection A	A 115
Dimension Water outlet	101

Spare Parts

KWC MANA
Lever mixer - Basin

Modell-Linie: MANA | 12.551.631.000FL
Taps | Manual taps

Cartridge M 35 OP

538331
Z.537.710