KWC GASTRO
Lever mixer - Commercial kitchen

Modell-Linie: GASTRO | 24.501.056.000
Hanat | Käsikäyttöiset hanat

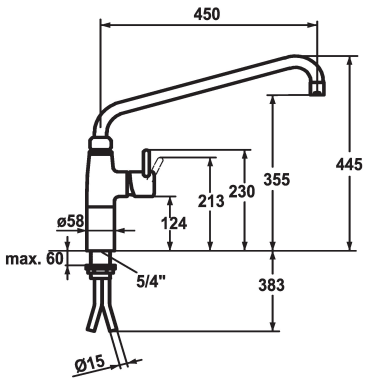

KWC-No.	Projection_A
121269 chromeline, A 300	A300
121270 chromeline, A 450	A450

* Lever mixer
* Pillar 100 mm
* Swivel spout 360°
- with adjustable gland
- Jet regulator
* OptimalSpace - ample space for washing or working
* KWC cartridge XL 46 - high capacity

- with ceramic discs
- flow rate and temperature continuously variable
- temperature limitation
* Copper tubes ø15 mm
* Fastening by means of threaded sleeve 1 ¼"
* Mounting hole size ø42 mm

Tekniset tiedot
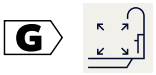
A_Spout_Spray	40 l/min (3 bar)
Connection	Kupferrohranschlüsse
Spout	schwenkbar
Handling	seitenbedient
ATT-KWC-FARBCODE	chromeline
Installation_type	Standmontage
Faucet_typ	01
Measure_Height	445
G_Acoustic group	U
Projection_A	A450
ATT-KWC-MASS-WASSERAUSTRITT	355
IviCode	0