KWC LUNA E
Lever mixer - Kitchen

Modell-Linie: LUNA E | 10.441.033.176FL
Umyvadlové armatury | Hydraulické armatury

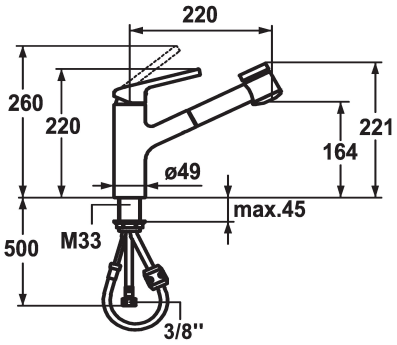

KWC-No.
123820 chromeline, A220
124751 matt black, A220

* Lever mixer
* TouchProtect - anti-scald protection thanks to the “double skin” principle
* Pull-out spray
- SprayClean - easy to clean and actively prevents limescale buildup
- up to 600 mm pull-out length
- SprayLock - lockable jet spray
- PowerClean - needle spray mode, with automatic diverter reset
- QuickConnect - Simple hose connection system
* Hose guide, swivelling 130°
* EasyLock - a pull-out spray that easily slides back into place
* KWC cartridge M 35
- with ceramic discs
- flow rate and temperature continuously variable
* Flexible connection hoses ⅜"
* Fastening by means of threaded sleeve M33 x 1.5
* Mounting hole size ø35 mm

Technické údaje
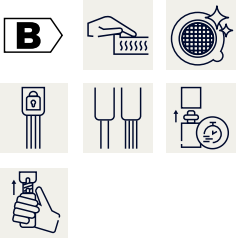
ATT-KWC-A_AUSZUGBRAUSE_SIEB	10 l/min (3 bar)
ATT-KWC-A_AUSZUGBRAUSE_NORMAL	10 l/min (3 bar)
Connection	Flexible_Anschlussschläuche
ATT-KWC-AUSLAUF	schwenkbar
Handling	topbedient
Kitchen_spray	Auszugbrause
ATT-KWC-FARBCODE	matt black
Installation_type	Standmontage
Faucet_typ	01
Measure_Height	220
G_Acoustic group	yes
Projection_A	A220
EnergyLabelCH	B
ATT-KWC-MASS-WASSERAUSTRITT	164
Materiál	mosaz