KWC AVA 2.0
Lever mixer - Basin

Modell-Linie: AVA 2.0 | 12.468.663.000FL
Armatura umywalkowa | Armatura jednouchwytowa

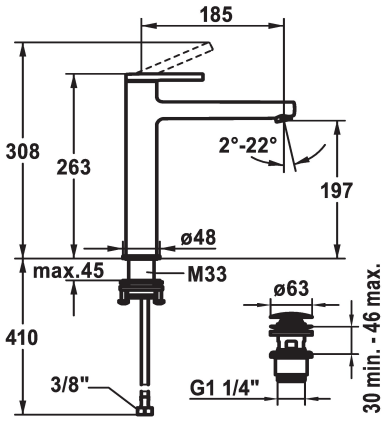

KWC-No.	ATT-KWC-ABLAUFGARNITUR
125100 chromeline, A 185, flexible connection hoses, without pop-up valve	ohne_Ablaufgarnitur
125101 chromeline, A 185, flexible connection hoses, with Push Open	mit_Push_open

* For top-mounted basins
* EcoProtect - water-saving device
* Fixed spout
- Neoperl® Perlator® SSR, swivelling jet regulator
* OptimalSpace - ample space for washing or working
* KWC cartridge S 25
- with ceramic discs
- flow rate and temperature continuously variable
* Flexible connection hoses ⅜"
* QuickInstallation - Fastening via threaded connection with locking screws
* Mounting hole size ø35 mm
* Scope of delivery:
- KWC pop-up valve Push Open 2 in 1 Z.538.321.000

Dane techniczne
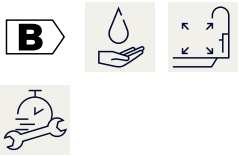
A_Spout_Spray	5 l/min (3 bar)
ATT-KWC-ABLAUFGARNITUR	mit_Push_open
Connection	Flexible_Anschlussschläuche
Handling	topbedient
ATT-KWC-FARBCODE	chromeline
Installation_type	für Waschschüssel
Faucet_typ	01
Dimension Height	263
G_Acoustic group	1
Projection_A	A185
EnergyLabelCH	B
ATT-KWC-MASS-WASSERAUSTRITT	197
Materiał	Mosiądz