KWC AVA 2.0
Lever mixer - Kitchen

Modell-Linie: AVA 2.0 | 10.461.032.176FL
Taps | Manual taps

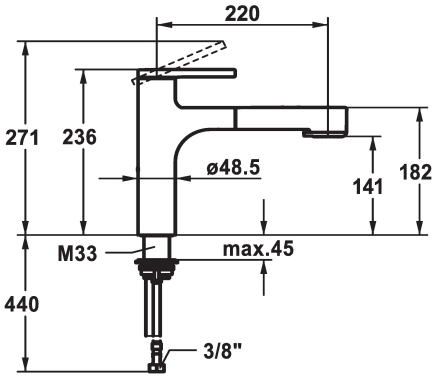

KWC-No.	Color code
125364 chromeline, A 220, flexible connection hoses	chrome
125365 matt black, A 220, flexible connection hoses	matt black
125366 brushed steel, A 220, flexible connection hoses	brushed steel

* TouchProtect - anti-scald protection thanks to the “double skin” principle
* Intrinsically safe against backflow
* Pull-out spray
- SprayClean - easy to clean and actively prevents limescale buildup
- up to 600 mm pull-out length
- TripleClean - Normal, soft, and power stream modes
- hose surface to fit faucet surface
- QuickConnect - Simple hose connection system

* Hose guide, swivelling 120°
* EasyLock - a pull-out spray that easily slides back into place
* KWC cartridge M 35 S
- with ceramic discs
- flow rate and temperature continuously variable
- temperature limitation
* Flexible connection hoses ⅜"
* QuickInstallation - Fastening via threaded connection with locking screws
* Mounting hole size ø35 mm

Technical Data
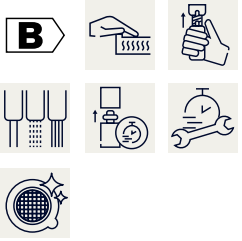
Flow rate needle spray	9 l/min (3 bar)
Flow rate normal spray	8 l/min (3 bar)
Connection	Flexible connection hoses
Spout	swivel
Handling	top lever
Kitchen_spray	Pull-out spray
Color code	matt black
Installation_type	Pillar installation
Faucet_typ	Faucet
Dimension Height	236
Acoustic group	Battery1
Projection_A	A 220
Energy Label	B
Dimension Water outlet	141
material	Brass